OWNERS MANUAL

CAR AUDIO
SuperNaturalSound

CAR AUDIO AMPLIFIER
D 1000

Digital class ”D” mono amplifier for subwoofer use

1000 watts output power into 1 ohm load

NOTE!
Read this manual thoroughly before you start to install

DLS Svenska AB
Box 13029
SE-402 51 Göteborg
Sweden
Phone +46 31 84 00 60
Fax +46 31 84 40 21
E-mail: info@dls.se
www.dls.se

Congratulations, you have just purchased the finest Car Audio amplifier that today´s technology can offer. DLS offers a series of high quality car audio products for real music lovers, and we are sure that you will enjoy a high class car sound for many years.

Read the owners manual first!

To maximize the performance of your system, we recommend that you thoroghly acquaint yourself with it´s capabilities and features. Please take your time to study this manual before starting the installation. Then you hopefully know how to do a correct installation avoiding connecting errors that can cause damage to this fine product. Retain this manual for future reference.

TABLE OF CONTENTS:

Page 2	**1. GENERAL PRODUCT INFORMATION**
Page 2	**2. INSTALLATION PREPARATION**
Page 2	2.1 Location
Page 2	2.2 Power cables
Page 3	2.3 Signal cables
Page 3-4	2.4 Speaker connection, speaker loads, speaker polarity check
Page 4	2.5 Level setting
Page 4	2.6 Final system setup
Page 4	2.7 Protection circuits
Page 4	**3. INTERNAL FILTERS**
Page 4	3.1 Lowpass / Highpass
Page 4	3.2 Bass boost
Page 5	**4. FAULT FINDING GUIDE**
Page 5	4.1 Noise problems
Page 5	**5. REMOTE SUB LEVEL CONTROL**
Page 5	**6. SPECIFICATIONS**
Page 6	**7. CONNECTION DIAGRAM**
Page 7	**For your own notes**

CAUTION!

Some of our amplifiers are capable of producing a sound pressure level that can cause permanent damage to your hearing system. High sound pressure levels combined with long time listening can give permanent damage to your hearing system. Choose a listening level that is comfortable for your ear.
To establish a safe level:
Start your volume control at a low setting. Slowly increase the volume until you can hear the music comfortly and clearly, without any distortion. Sudden sound shocks are dangerous.

The following noises can be dangerous with constant exposure:

90 dB	Subway, motorcycle, lawn mover	4 hours max
100 dB	Chain saw	2 hours max
120 dB	Rock band live concert	30 minutes max
140 dB	Gunshot blast, jet plane	0 minutes

1. General product information

Thank you for buying a DLS amplifier. This amplifier is a high quality product and is a result of many years of experience of building high quality sound products for vehicles.

We recommend you to carefully read this manual before you start to install. Be sure to follow all recommendations in the installation section. If you do so we are sure that you will be able to enjoy a perfect sound for a long time,.

2. Installation preparation

2.1 LOCATION

We recommend you to do a careful planning before you start to install this equipment.
Choose a location for the amplifier which will allow plenty of air to circulate around the fins on the top of the case. Vertical mounting is to prefer. Do NOT mount the amplifier upside down under the hat rack.
In the amplifier case there are double mounting holes to make the installation job easier. The screws supplied in the plastic bag are self drilling when used with an electric screwdriver.
If the surface where you intend to mount the amplifier isn´t big enough you can mount the amplifier on a separate fibre board or similar. This will also isolate the amplifier chassies from ground.

NOTE! Before you start drilling, make sure that there are no fuel or brake lines or wiring looms behind where you intend to drill.

2.2 POWER CABLES

The DC power wiring is extremely important. It is essential that the amplifier at all occassions gets all the power it needs without voltage drop, otherwise both the dynamics and the good sound will be lost.
A poor battery can also cause a bad sound reproduction, escpecially in the bass range. Sometimes it is necessary to mount an extra battery.
The speaker cable connections requires a 2 mm hexagon key to connect the terminals, and the power cable connections require a 4 mm hexagon key.

In most cases a so called ”Power Cap” can be useful. It is an energy storage capacitor designed to supplement audio amplifiers during high current demand. The overall bass response of your audio system will be enhanced with the use of this due to it´s ability to store a large amount of current and discharge it in a short period of time.

In the table below you will find suitable cable and fuse sizes for different cable lenghts.
The gold plated terminals will directly recieve power cables up to 21 mm² (4AWG).
Mount the fuse holder included in the amplifier on the DC -cable near the positive battery terminal. Use the same cable size from the negative amplifier terminal and connect to the nearest earth point.
The Fuse holder accepts cables up to 21mm² if you remove the inner bushing. If you are using heavier cables use another type of fuse holder or cut some of the strands in the cable.
Make sure to have a good earth contact, if necessary clean the metal from paint etc. A poor earth contact can cause damage to other parts in the system, for example the head unit if the earth current is forced to pass through the shield of the signal cable.

Recommended cable size for the DC-feed.

Cable length:	**< 1,5 m**	**1,5 - 5 m**	**> 5 m**
D 1000	16 mm²	21 mm²	33 mm²

Recommended main fuse for D 1000:

Amplifier	**Fuse value**	**Fuse holder**
D 1000	AGU 80A	FH1/FH1B

A cable of a certain size can´t have an oversized fuse, then the cable gets too warm before the fuse blows.

Max fuse values for different cable sizes:

6 mm² (9 AWG)	25 A
10 mm² (7AWG)	40 A
16 mm² (5AWG)	60 A
21 mm² (4AWG)	100 A
33 mm² (2AWG)	140 A
42 mm² (1AWG)	200 A

If you have more than one amplifier in the system you must increase the cable size and fuse compared to the table. When connecting two or more amplifiers use some of the DLS Fuse blocks with built in fuses to split the power to each amplifier. The short cable from the Fuse block to the amplifier can have a smaller size for easier installation.
Don´t connect to battery before you have double checked all connections.

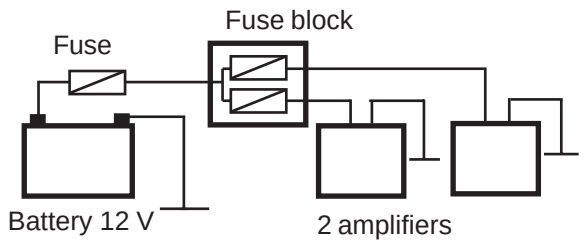

2.3 SIGNAL CABLES

D 1000 has two gold plated phono socket pairs. The upper pair is used to recieve the signal from the head unit and the lower pair has a line out function if you want to connect to more amplifiers.
Both inputs must recieve an input for full power output.

Use high quality interconnects like the DLS SL5 PRO or similar with an effective shielding that prevents interference from the engine or alternator. When using this cable you must run a separate wire for the remote.

When you run the signal cables remember to keep them well spaced from the wiring loom and the power feed to the amplifier to avoid picking up interference. Lay the power cables and signal cables separated on each side of the car. Any extra cable must be laid in zig-zag style and definitely not coiled. Or cut it to correct lenght.

REMOTE WIRE
Some signal cables include a thin wire for remote amplifier start. High quality cables normally requires a separate wire for this. Connect between the head units remote cable (often the same cable that´s used for automatic power antennas) and the REM-terminal on the amplifier.

NOTE! If you want to start more than one amplifier using the remote output, the current load might be too high for som head units. High currents may damage the head unit, check in the manual for the head unit. Sometimes you must add a relay to the remote circuit that takes care of the higher current. If you are uncertain of how to connect the relay, ask your local DLS dealer for advice.

2.4 SPEAKER CONNECTION

There are double speaker connections internally connected to each other. The reason for having double connections is for making it easier to connect more than one speaker.
The gold plated terminals will directly recieve speaker cables up to 6 mm^2 (9AWG). Always use high quality speaker cables such as **DLS SC 2x2,5** or **SC 2x4.**
Connect the speaker + (marked with + or a red dot) to the amplifier + terminal, and the speaker - to the amplifier -.
When fitting the cables to the terminals, remove only 10 mm of the insulation. Twist the wire strand together and insert the wire after loosening the terminal screw. Do not over tighten as this can cut the cable strands. Use a 2 mm hexagon key to the terminals.

PROTECT YOUR CABLES!

To prevent the cable insulation from beeing damaged over sharp metal edges we recommend the use of cable protection tubes or similar. A damaged cable insulation could cause serious damage to the amplifier not covered by any guarantee.

SPEAKER POLARITY CHECK.

All speakers in a car audio system should be connected in phase (the same polarity). All speaker cones must move in the same direction. Out of phase speakers will cause a lack of bass, and a poor stereo soundstage.

Checking polarity:
Hold the - connection of the speaker wire to the - terminal of a 1,5 Volt flashlight battery. Tap the + wire on to the + terminal of the battery, and observe the movement of the cone. The cone should move outwards when the wire touches the battery, and inwards when the battery is removed. If it is the other way around, the speaker has been connected backwards and it must be removed and connected correctly.
If your system also has a subwoofer connected through a passive 6 or 12 dB crossover, try to connect this with various polarity and judge what sounds best. The phase shift in passive crossovers sometimes makes it necessary to change polarity.

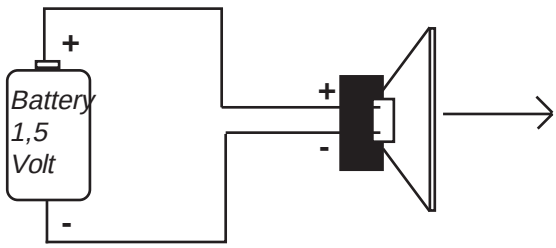

NOTE! Tweeters can not be tested this way, double check the connections instead.

SPEAKER LOADS

Most car audio speakers have a 4 ohm impedance. D 1000 can be loaded down to 1 ohm.
When loaded with one 4 ohm speaker the output power is 350 Watts. When loded with two 4 ohm speakers in prallel (2 ohm load) the output power is 700 Watts, and when loaded with four 4 ohm speakers connected in parallel the output power is up to 1000 Watts.

On page 4 you find different speaker wiring examples.

SPEAKER CONNECTION EXAMPLES

TWO 4 OHM SPEAKERS IN PARALLEL.

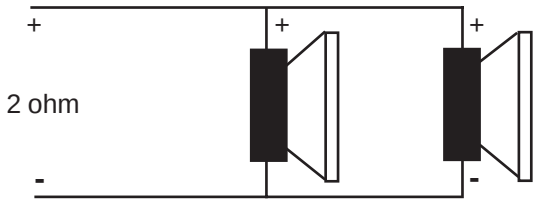

TWO 4 OHMS SPEAKERS IN SERIES.

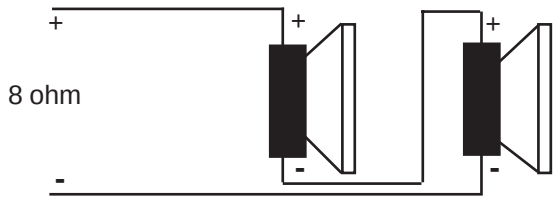

Not a recommended way to connect, the power is only half.

PARALLEL TO 1 OHM.

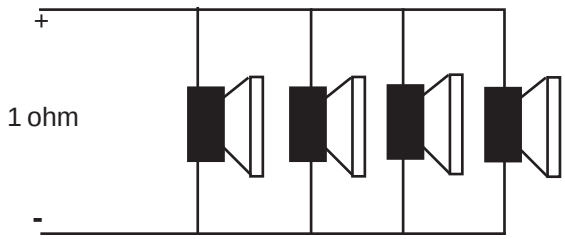

Each speaker is 4 ohm

2.5 LEVEL SETTING

To adapt the amplifier to all kind of signal sources with varying levels there are a level control provided on the amplifier next to the phono sockets. It should not be used as volume controls.
Start with a ”12 o clock” setting of the level controls. If you set the head unit volume to 75% of maximum you should achieve a good sound without distortion. Find a point of the level setting where the distortion is just discernible. At this point slightly reduce the control to eliminate the distorsion.
If you have a system with an amplifier for the front stereo system it´s necessary to adjust the levels indiviually to achieve a good sound balance between the different speakers, different speakers have different sensitivity. Start the level adjustment on the mono amplifier. After having adjusted the bass level for good performance, adjust the level to the front system amplifier for a good sound balance.

2.6 FINAL SYSTEM SETUP

Before connecting the amplifier to the battey, recheck all connections. When you connect the main fuse you will see a little spark, this is normal. But if the fuse blows at this moment, something is wrong. Recheck the cabling.
Turn on your head unit, the amplifier starts and the green POWER LED is lit. Increase the volume and make sure all speaker works. Readjust levels and crossover settings if necessary.

2.7 PROTECTION CIRCUITS

PROTECTION LED
The amplifier has internal protection. The red protection LED is illuminated when fault condition exists and the amplifier immideately shuts down. If illuminated, turn amplifier off, check for shorted speaker wires and attempt to re-power amplifier. When the amplifier overheat and thermal protection shuts the amplifier off, the LED does not illuminate.high current protection circuit shutting down the amplifier if the current draw is too high.
OVERLOAD LED
Allow self-test when power is turned on and then LED should be illuminated during checking. It should be automatically turned off 3 seconds later. It will illuminate if there is trouble like speaker short or if any part of the amplifier is overloaded.

3. Internal filters

3.1 Lowpass / Highpass

D 1000 has an internal variable lowpass filter. It can be set from 35 up to 250 Hz. It also has an internal higpass subsonic filter that can be set from 15 up to 35 Hz.

LOWPASS FILTER:
The lowpass filter is normally used together with a subwoofer to remove higher frequencies over the crossover setting. A normal filter setting is 80 - 100 Hz.
HIGHPASS FILTER:
The highpass filter should be used as a subsonic filter together with a subwoofer to remove the lowest frequencies which often causes a rumbling bass reproduction. A normal setting is 20 - 30 Hz.

3.2 BASS BOOST CONTROL

Adjust the sub boost level of the selected frequency output from 0 to 18 dB.

4. Fault finding guide

If problems occour during the installation, or later, this guide might help you to find out whats´s wrong.

THE AMPLIFIER IS DED:

1. Check power lead, ground and remote connections at the amplifier using a voltmeter.
2. Check the battery terminal connections.
3. Check the power lead fuse or circuit breaker. If fuse damage continues, inspect the power lead for short circuits.
4. To start the amplifier requires a remote voltage of 9-15 volt. Check the voltage with a voltmeter.

AMPLIFIER PROTECTION CIRCUITS TURNS THE AMPLIFIER OFF

1. One or more speaker cables are shorted. Make an insulation test with a multi meter. The cables must not have a connection to earth.

THE AMPLIFIER TURNS OFF AFTER 10 - 30 MINUTES.

The amplifier is overheating due to inadequate ventilation. Check mounting position is free from obstruction.

Do this:

1. Move the amplifier to a place with better ventilation.
2. Install one or two fans to cool down the heatsink.
3.Overheating can also be caused by an impedance load below the level permitted. Refer to the section about speaker loads.

4.1 NOISE PROBLEMS

WHINING NOISE VARYING WITH ENGINE REVOLUTIONS:

Do this:

1. Rewire the power supply (12 V) to source unit direct from battery.
2. Rewire ground wire from source unit to clean position on chassis.
3. Check all power connections to ensure that they are clean and tight.
4. Check quality of system ground connection.

CONSTANT WHINING NOISE:

Do this:

1. Ensure that all equipment is grounded at the same place.
2. Check quality of earth strap connection from battery negative terminal to chassis.
3. Disconnect signal cables from amplifier to see if noise disappears. If so the leads are picking up noise. Test this by laying a new cable over the seats and reconnecting to the amplifier. If the noise does not return, re-route original cable away from source of interference.

If noise remains regardless of cable position, try to use so called Quasi-balanced signal cables. DLS PRO-cables are Quasi-balanced.

5. Remote sub level control

A remote sub level control is coming with this amplifier. The 6-pole modular cable should connect between the REMOTE socket on the amplifier and the socket on the back of the external remote control box.

Fasten the remote control box under the dashboard or in a way that does not violate the car safety regulations of your country.

The remote sub level contro lallows you to adjust the bass level of the sound individually, making it easier to get just the bass level you want in different kinds of music.

6. Specifications

MODEL D 1000

Digital class ”D” subwoofer amplifier

Channels	1
Mode	D

Output power at 14,4 Volt:

4 ohm nom. power RMS (0,3% THD)	350 Watts
2 ohm nom. power RMS (0,5% THD)	700 Watts
1 ohm nom. power RMS (1% THD)	1000 Watts
S/N ratio, A-weighted	> 80 dB
Damping factor 4 ohm 100 Hz	> 300
Frequency response	27 - 235 Hz
Input sensitivity	0,2 - 6 volt
Input impedance	22 kohm
Efficiency	80%
Crossover, subsonic	15 - 35 Hz
Crossover, lowpass	35 - 250 Hz
Bass EQ (boost)	18 dB (46 Hz)
Fuses (external)	80 A
Max size for power cables	21 mm^2
Max size for speaker cables	6 mm^2
Protection circuits	Current and thermal

Power consumption:

Idle	0,9 A
Max current	97 A
Remote	30 mA

Dimensions:

Width	407 mm
Heigth	65 mm
Depth	240 mm
Weigth	5,4 kg

Use a 2 mm hexagon key for the remote and speaker terminals.

Use a 4 mm hexagon key for the power terminals.

7. Connection diagram D 1000

This amplifier is constructed for use as a subwoofer amplifier. All features on the amplifier is made for this purpose. It is possible to connect speakers in many various ways as long as the impedance load is not lower than 1 ohm. The speaker terminals on the amplifier are internally connected in parallel.

D 1000 can be connected in some of these ways:

Subwoofers with single 4 ohm voice coil:

1. With one subwoofer connected to one of the terminals.
2. With two subwoofers, one to each terminal.
3. With three subwoofers, two to one terminal and one to the other terminal.
4. With four subwoofers, two in parallel to each terminal.

Subwoofers with dual 4 ohm voice coil:

1. One subwoofer with the separate voice coils connected one to each terminal.
2. Two subwoofers with the voice coils connected in parallel on each subwoofer and then connected with one subwoofer to each terminal.

There are a number of more ways to connect if you have more than four subwoofers as long as the impedance load to the amplifier is not lower than 1 ohm.

Four 4 ohm subwoofers connected in parallel.

The speaker impedance is 4 ohms in this example giving an amplifier load of 1 ohm.

For filter setting see page 4.

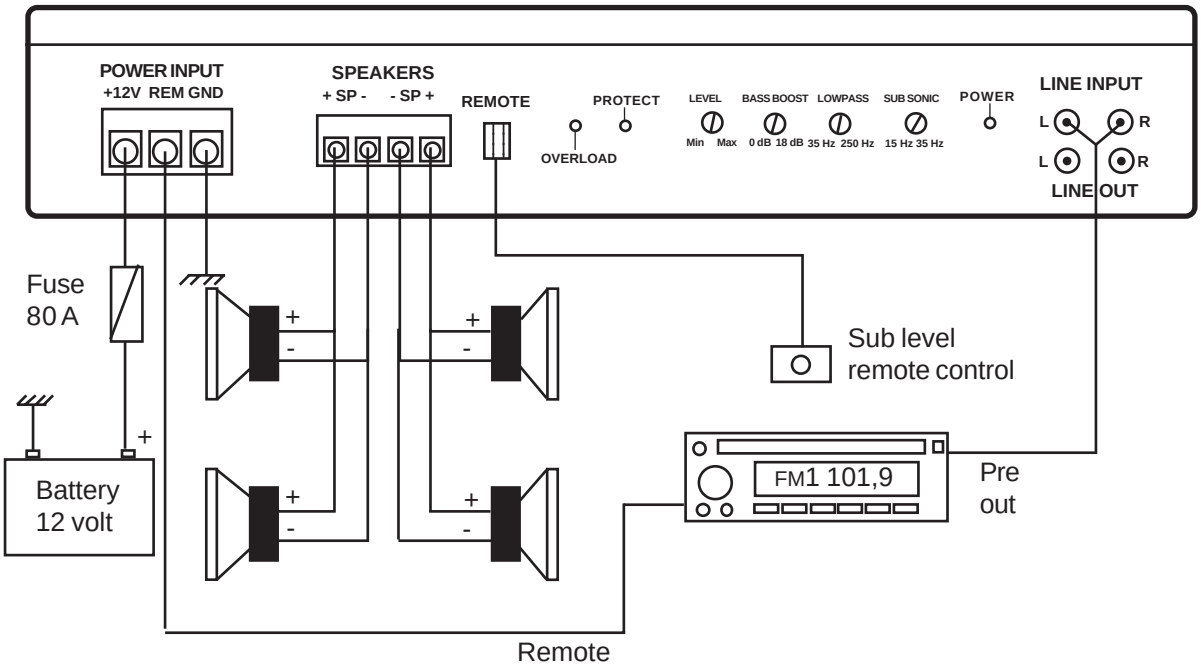

Notes about the product:

Model no:_____ Serial number:_____

Retailer:_____

Date of purchase: _____ Date of installation: _____

Make your own installation notes about connections, crossover setup or just draw your own system schematic.